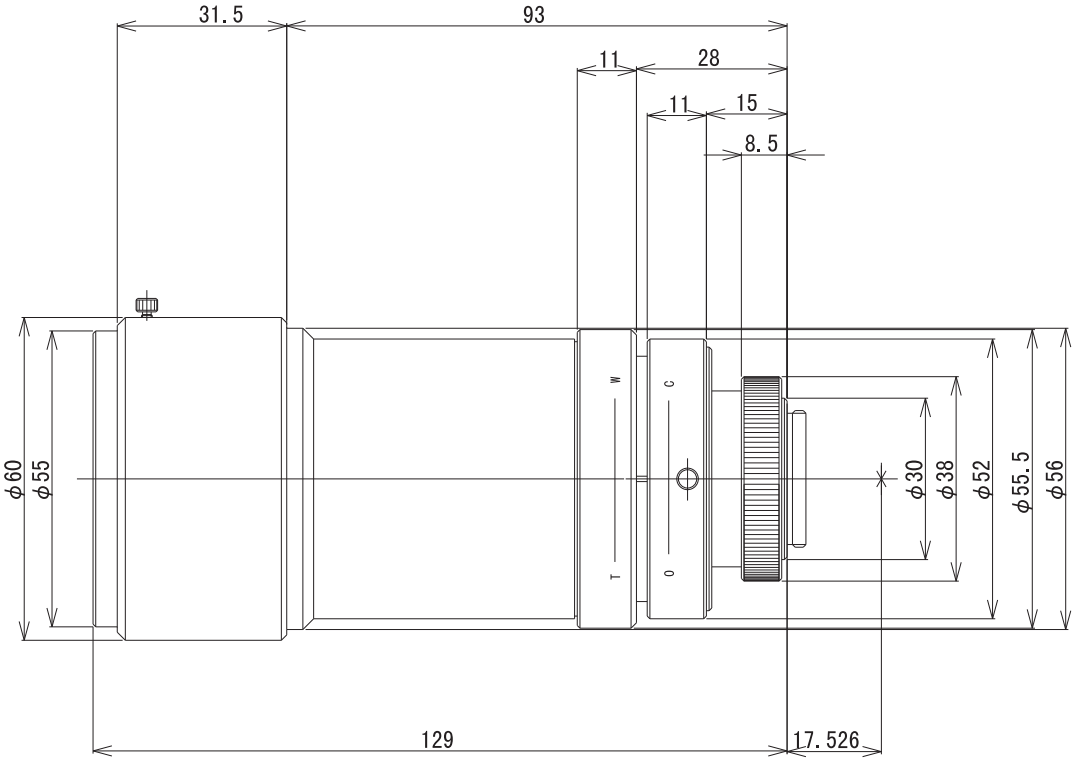

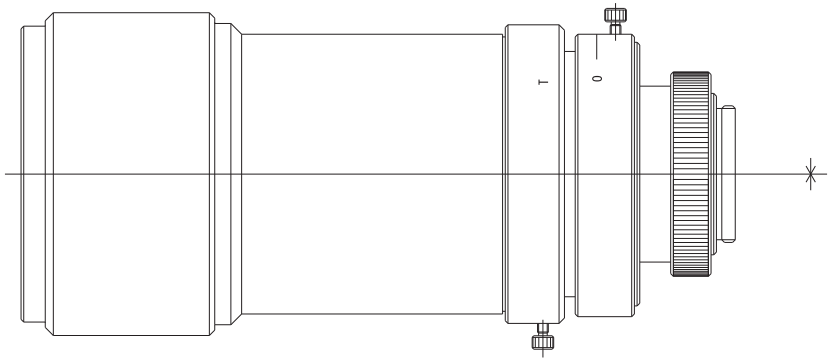

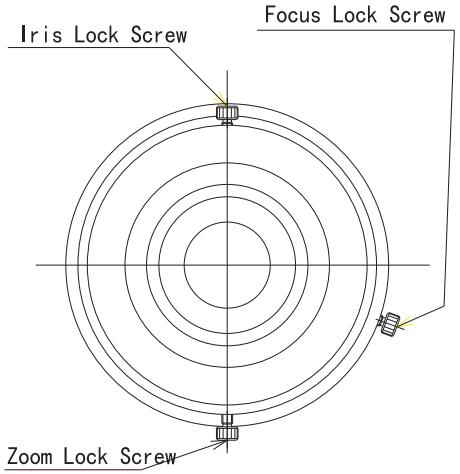

		1/1		
		LMZ503M		
98.3.3				